RHD Rotor Handling Device

http://www.whitelegg.com/product-search/rhd-rotor-handling-device

For the safe and easy handling of rotors

- Two versions. RHD-1000 kg capacity and RHD-4000 kg capacity
- saves time compared to using lifting straps
- ensures safe rotor handling
- incorporated four lifting tubes 50, 60, 80, 100 mm diameter for different rotor shaft sizes. RHD-4000 has three tubes 100, 150 and 200 mm
- RHD-4000 for rotors up to 2000 mm long and 800 mm diameter

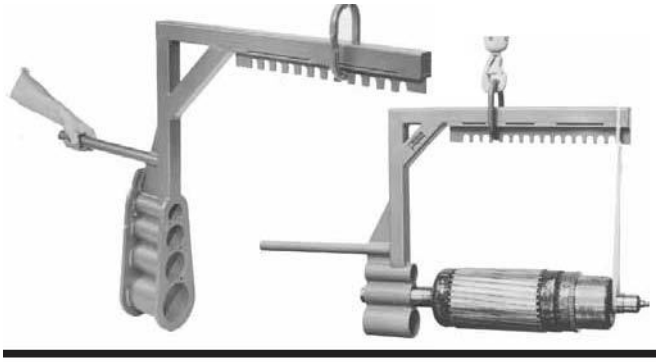

Whitelegg Machines Ltd, 4 The Boulevard, Altira Park, Herne Bay, Kent CT6 6GZ, UK
Tel: +44 (0) 1293 526 230 | Fax: +44 (0) 1293 538 910 | Email: info@whitelegg.com